Beech Super King Air 200
39" span rubber powered flying scale model
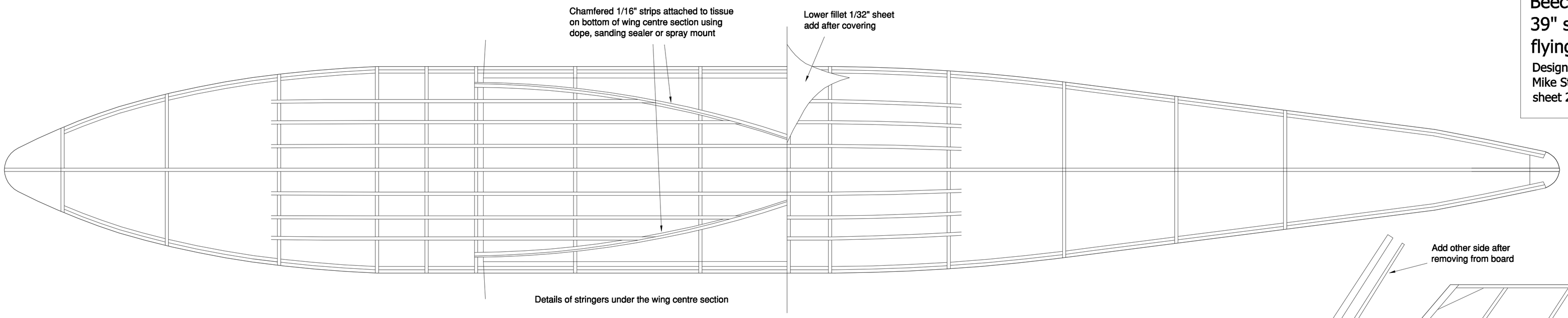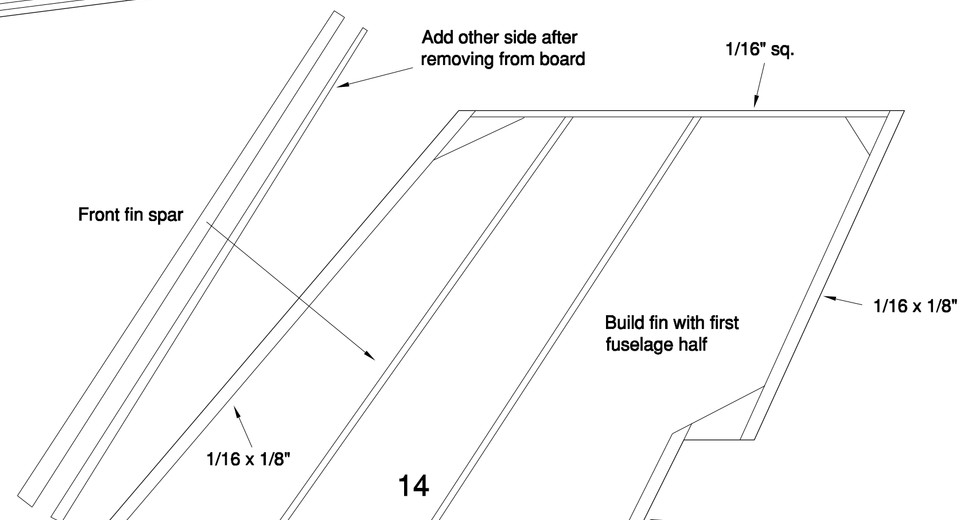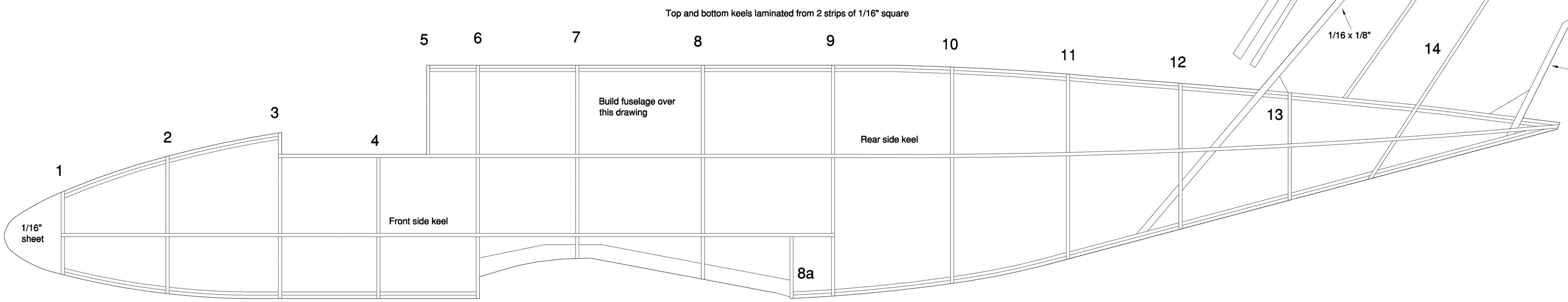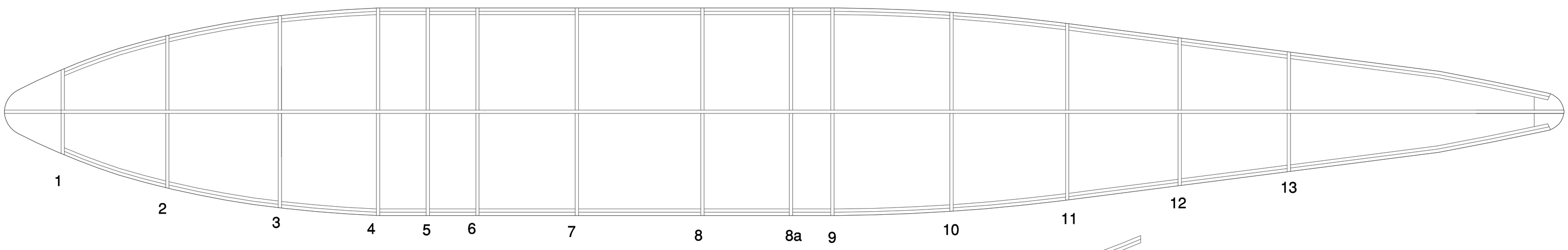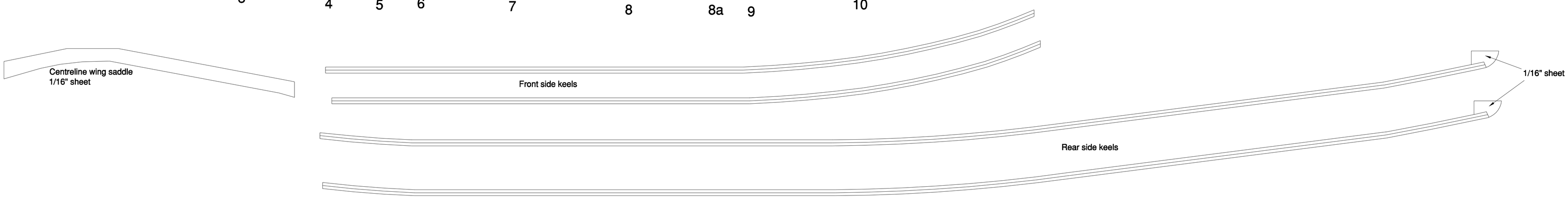
Designed and drawn by
Mike Stuart
sheet 2 of 3